Material-Saving Freeform Stair

Angela Yoo, Andrei Jipa, Georgia Chousou, Benjamin Dillenburger

Prioject Description

Stairs play an important functional and symbolic role in architecture, where they offer scope for a variety of creative designs, depending on the material. Highly efficient, lightweight freeform stairs in concrete are certainly conceivable but are difficult to realise with conventional formwork. In cooperation with ROK Architects and industrial partners, the Chair for Digital Building Technologies at the Swiss Federal Institute of Technology Andrei Jipa, DBT, ETH Zürich (ETH) Zurich has built such a stair named Cadenza. Its concept is based on computationally designed geometries that are optimised for structural efficiency and material reduction. The system is suitable for use even in difficult site conditions, for example, for helical stairs in tight installation spaces. Every step is a separate concrete element, precast in a reusable 3D-printed formwork. The lightweight stair, which can be disassembled, was installed in September 2024 in the STEP2 Unit in the Next Evolution in Sustainable Building Technologies (NEST) research building in Dübendorf near Zurich.

Detail Definition

The resulting step design concentrates most of the mass at the helical spine with load-bearing ribs supporting the thin treads. Each step weighs 45 kg, almost 60 % lighter than conventional solid concrete steps. This simplified handling and logistics on site. Numerous functional details are integrated into the steps, including ducts for the post-tensioning bars, interlocking shear keys for assembly and provisions for connecting to railings andfloors. The steps have anti- slip patterns directly cast into the stepping surface. 3D printing allows project-specific customisation, innovative tectonic concepts and material-efficient geometries.

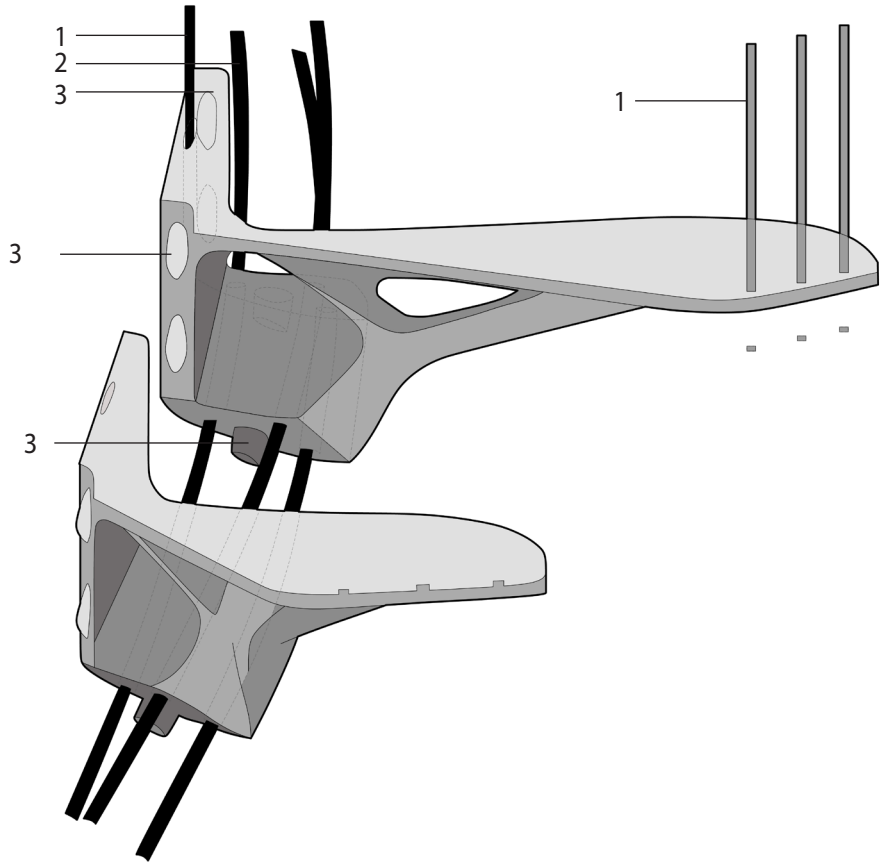

Drawing legend

1 Ø 14 mm steel balustrade

2 3× Ø 18 mm shape- memory alloy post-tensioning bars

3 40 × 80 mm shear keys

4 Ø 55 × 50 mm casting inlet stub

Ambitious Design

For Cadenza, the research team combined shape-memory steel reinforcement with ultra-high performance fibre-reinforced concrete (UHPFRC). The stair elements were manufactured using 3D-printed formworks. This approach enables the efficient manufacture of functional, repetitive or bespoke high-quality building components that simplify the downstream workflow on site. The extremely high tensile strength (158.5 MPa) of the concrete lends itself to a modern design with thin, material-efficient cross sections and complex shapes. Just 20 mm thick, the treads cantilever from a central helical spine where interlocking shear 1 keys at the interface of each step enable the dry-stack assembly. The spine also contains the ducts for post-tensioning steel.